WATER

RAIN IN MILANO

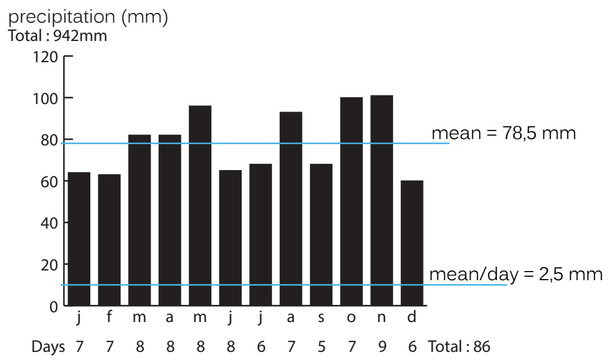

On 1ha of land, it rains approximately 25m³ of water a day. But we can't harvest the rain on the entire site ground. Supposing that we can only harvest on a third of the land, (the other 2/3 are woods, roads, and rivers surfaces), we would harvest a total of 8m³ of water a day.

Considering that a person uses in average 0,2 m³ of water a day, a 1ha site could only supply 40 people.
But even if 30% of the used water won't back to the water pipes (due to evaporation and garden watering), the 70% left of used water could be filtered on site and be reused by the same people, and more. In that way we can increase the number of possible inhabitants.

WATER CONSUMPTION PER CAPITA PER DAY

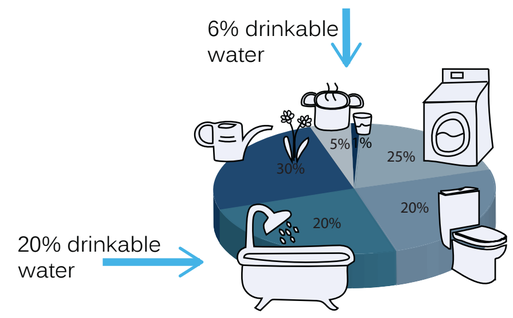

An average Italian person uses around 175l a day.
74% of the water he uses doesn't need to be drinkable. This 129l could thus directly come from the rain water harvested and slightly filtered, while the 26% left would have to be drinkable.

WATER CYCLE

GENERAL CASE

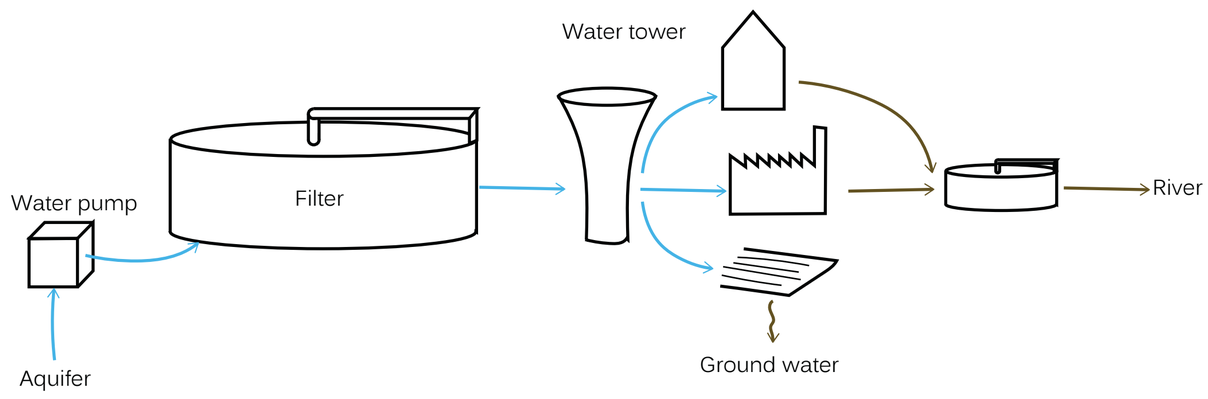

SELF-SUFFICIENT CASE

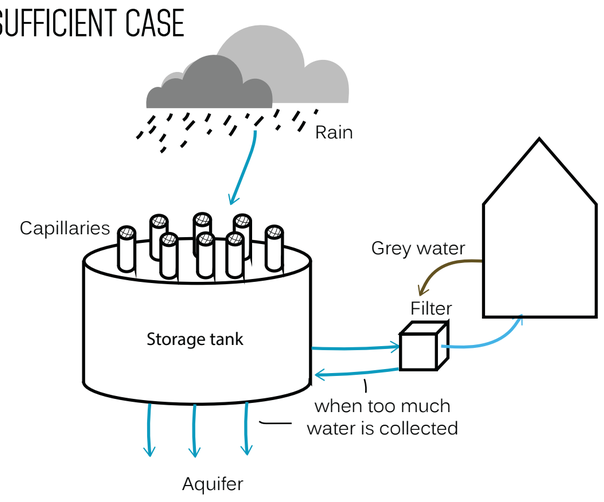

This way they will probably have too much water in the system, and they will then release some of it gradually to recharge ground water.

NEW IDEA: SELF-SUFFICIENT BUT SHARING

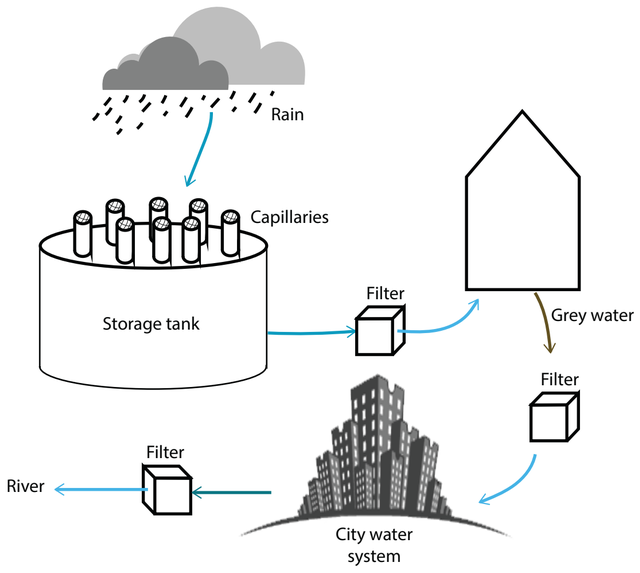

The house will act as a water harvester, collecting water not from the aquifer but from rainfall. Rain becomes a new water source, and the collected water enters the city water system (ideally the city will have rain water pipes, separated from drinkable water pipes) .

THE SHAPE OF THE PLOT

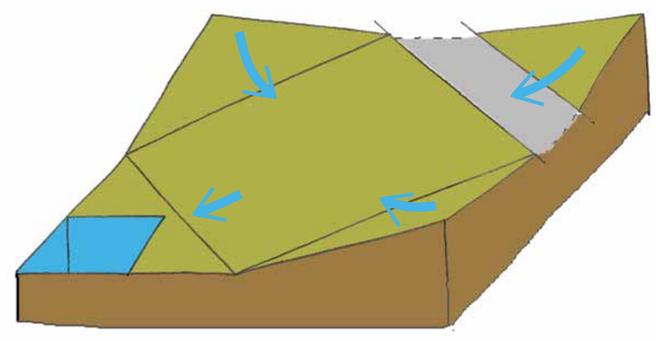

The shape of the plot will be curved in order to optimize the water collection.

RAIN WATER HARVESTING ON PLOT

In a general case of building site

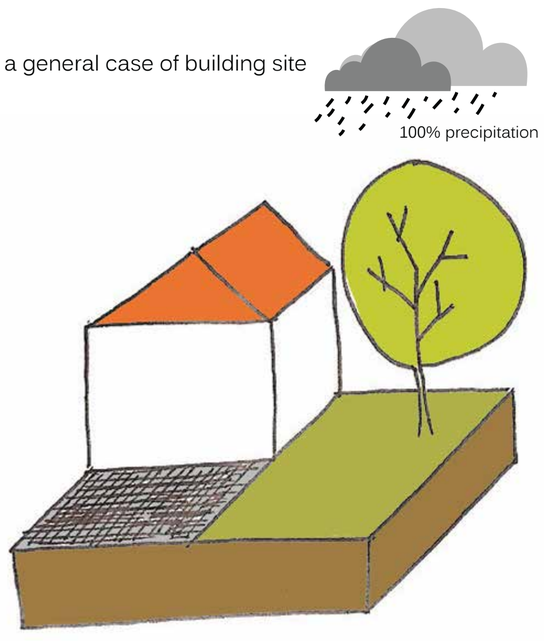

26% evapotranspiration
12% shallow infiltration
19% deep infiltration
18% run-off
25% harvested

In a more sustainable building site

26% evapotranspiration
10% shallow infiltration
15% deep infiltration
49% run-off
0% harvested

Improving the concept

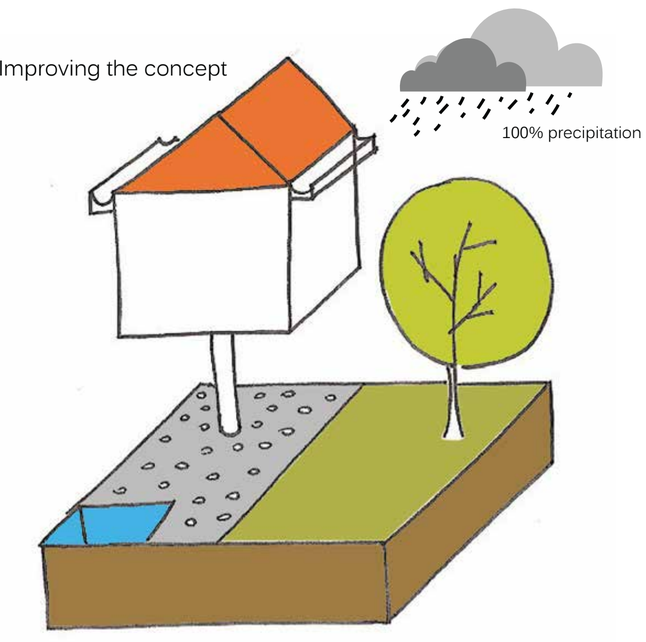

26% evapotranspiration
12% shallow infiltration
18% deep infiltration
19% run-off BUT HARVESTED
25% harvested -> 44% total harvested

Extra
5% evapotranspiration
2,5% shallow infiltration
4% deep infiltration

Turning the impermeable surface in a more permeable one by raising up the building reducing the built surface by more than 80%.
Leaving more space for vegetation.
Creating water basin for rain water collection and storage.

The extra percentages mean that a plot could evaporate and infiltrate more water than what it gets.

CALCULATION FOR RAIN HARVESTING BY INDIVIDUAL BASIN

The needs of undrinkable water for a family of 4 amounts to 516 liters per day. The individual basins will store water for a month need (16m³). It will also be able to collect up to an extra 6m3 of rain (estimated to be the precipitations during a stormy day on the plot, or the precipitations of a week of rain).

INDIVIDUAL BASIN

The level of water in the basin is usually 1,5m high, but it can raise up to 2,1m after a week of bad rain.

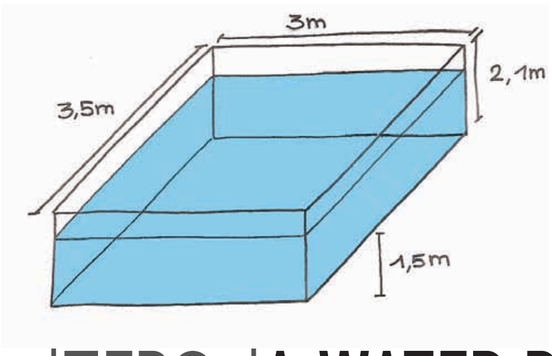

The individual basin will be imposed on each plot but every users can customize it as he wishes to.